Answers **Lesson 5 Warm Up Quiz**

Math 2B: Applied Linear Algebra

True/False For the problems below, circle T if the answer is true and circle F is the answer is false.

1.	**T**	F	If $\mathbf{x} \in \mathbb{R}^n$, then the inner product of $\mathbf{x}$ with itself is given by $\mathbf{x} \cdot \mathbf{x} = \|\mathbf{x}\|_2^2$
2.	**T**	F	$\sqrt{\mathbf{x} \cdot \mathbf{x}} = \|\mathbf{x}\|_2$
3.	**T**	F	If $f(\mathbf{x}, \mathbf{y}) = \mathbf{x} \cdot \mathbf{y} = \mathbf{x}^T \mathbf{y}$, then the codomain of f is $\mathbb{R}$.
4.	**T**	F	Suppose $\mathbf{x}, \mathbf{y} \in \mathbb{R}^n$. $\mathbf{x} \cdot \mathbf{y} = \sum_{i=1}^{n} x_i \, y_i$
5.	**T**	F	$\mathbf{x} \cdot \mathbf{x} = \|\mathbf{x}\|_2^2$
6.	T	**F**	$\mathbf{x} \cdot \mathbf{x} = \|\mathbf{x}\|_2$
7.	T	**F**	$\|\mathbf{x}\|_2 \, \|\mathbf{y}\|_2 = \mathbf{x} \cdot \mathbf{y} \cos(\theta)$ where θ is the angle between $\mathbf{x}$ and $\mathbf{y}$.
8.	T	**F**	If $f(\mathbf{x}) = \|\mathbf{x}\|_2$, then $\mathrm{Rng}(f) = (0, \infty) \subseteq \mathbb{R}$.
9.	**T**	F	$\mathbf{x} \cdot \mathbf{y} = \|\mathbf{x}\|_2 \, \|\mathbf{y}\|_2 \cos(\theta)$ where θ is the angle between $\mathbf{x}$ and $\mathbf{y}$.

Multiple Choice

For the problems below, circle the correct response for each question.

1. Let $E = \{\mathbf{e}_j\}_{j=1}^4$ be the standard basis for $\mathbb{R}^4$:

$$\mathbf{e}_1 = \begin{bmatrix} 1 \\ 0 \\ 0 \\ 0 \end{bmatrix}, \qquad \mathbf{e}_2 = \begin{bmatrix} 0 \\ 1 \\ 0 \\ 0 \end{bmatrix}, \qquad \mathbf{e}_3 = \begin{bmatrix} 0 \\ 0 \\ 1 \\ 0 \end{bmatrix}, \qquad \mathbf{e}_4 = \begin{bmatrix} 0 \\ 0 \\ 0 \\ 1 \end{bmatrix}.$$

Define the vector $\mathbf{x}$ by taking a linear combination of elements of E below

$$\mathbf{x} = 2\,\mathbf{e}_1 - 5\,\mathbf{e}_2 - 3\,\mathbf{e}_3 + 4\,\mathbf{e}_4.$$

Which of the following gives the value of the dot product $(\mathbf{e}_4 - \mathbf{e}_2) \cdot \mathbf{x}$:

A. 9 B. -9. C. -2 D. 1 E. -1

2. Consider the following two column vectors

$$\mathbf{x} = \begin{bmatrix} -1 \\ 1 \\ 1 \\ -1 \end{bmatrix}, \qquad \mathbf{y} = \begin{bmatrix} 1 \\ -1 \\ 1 \\ 1 \end{bmatrix}$$

Find the angle θ between these vectors:

A. $-\frac{1}{2}$ B. π **C.** $\frac{2\pi}{3}$ D. $\frac{\pi}{3}$ E. $\frac{5\pi}{6}$

3. Define vectors

$$\mathbf{x} = \begin{bmatrix} t \\ -4 \\ 2 \\ t \end{bmatrix}, \qquad \mathbf{y} = \begin{bmatrix} -t \\ t \\ 5 \\ 1 \end{bmatrix}$$

Find <u>all</u> values of scalar t so that the inner product $\mathbf{x} \cdot \mathbf{y} = 0$

A. $t = -2$ B. $t = 5$ and $t = -2$ C. $t = 5$ and $t = 2$ **D.** $t = -5$ **and** $t = 2$ E. $t = 5$

Free Response

1. State and prove each of the following the pythagorean theorem

Solution:

First, let's state the pythagorean theorem in full. Recall:

Theorem 1: Pythagorean Theorem

Let a, b, c be positive real numbers representing the length of the base, height and hypotenuse, respectively, of a right triangle. Then $a^2 + b^2 = c^2$.

Proof. Let's begin by visualizing our right triangle and labeling the length of side as indicated in the theorem statement. Further, let's introduce variables θ and ϕ to represent the two acute angles of our triangle as detailed below:

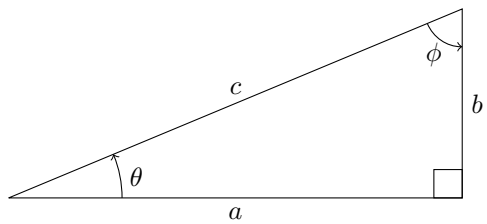

We know the sum of all three interior angles of our triangle add to $180° = 90° + \theta + \phi$. Using four copies of this triangle, let's construct a special quadrilateral.

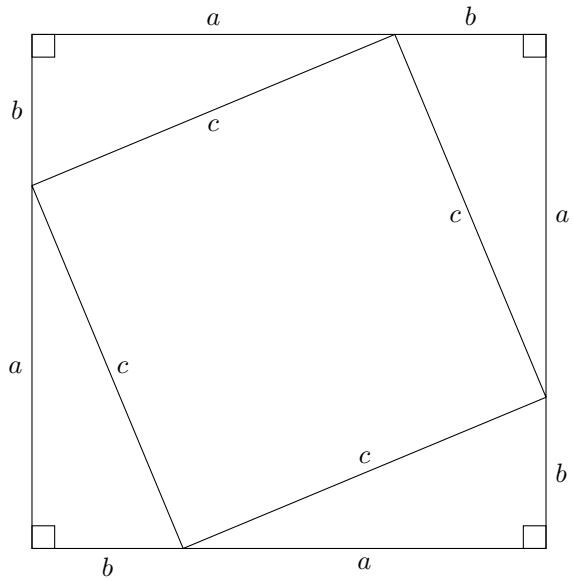

Because we know that $\theta + \phi = 90°$, we can immediately conclude that the quadrilateral defined by the hypotenuses forms a square with area c^2. Moreover, the total area of the square is given by

$$(a + b)^2 = a^2 + 2a\,b + b^2$$

If we take away each of the four triangles and leave only the center square then we know

$$c^2 = (a+b)^2 - 4\left(\frac{1}{2}ab\right)$$

$$= a^2 + 2ab + b^2 - \frac{4}{2}ab$$

$$= a^2 + b^2$$

We conclude that $a^2 + b^2 = c^2$ as was to be shown. $\square$

2. State and prove the Law of Cosines (BOTH acute and obtuse case)

Solution:

Theorem 2: Law of Cosines

Let a, b, c be positive real numbers representing the length of the three sides of any triangle. Let θ be the angle opposite the side of length c and between the sides of length a and b. Then

$$c^2 = a^2 + b^2 - 2a\,b\cos(\theta)$$

Proof. Let's break the theorem statement into two cases:

Case I: The Acute Case $\left(0 < \theta < \frac{\pi}{2}\right)$

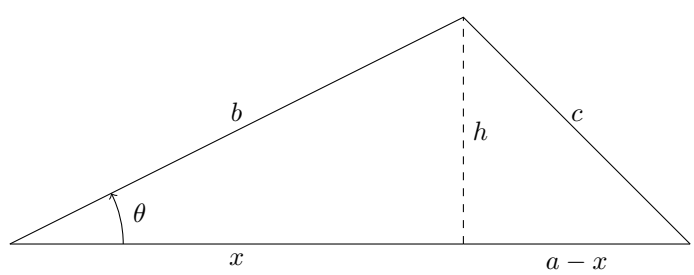

In this case we have $x^2 + h^2 = b^2$. Further we see

$$c^2 = (a-x)^2 + h^2$$

$$= a^2 - 2ax + x^2 + h^2$$

$$= a^2 - 2ax + b^2$$

Since $x = b\cos(\theta)$ by the definition of cosine as the ratio of the adjacent angle over the length of the hypotenuse, we see

$$c^2 = a^2 + b^2 - 2ab\cos(\theta)$$

which is what we wanted to show. $\square$

Solution:

Proof. Case II: The Obtuse Case $\left(\frac{\pi}{2} < \theta < \pi\right)$

Below we draw the relevant image for Case II.

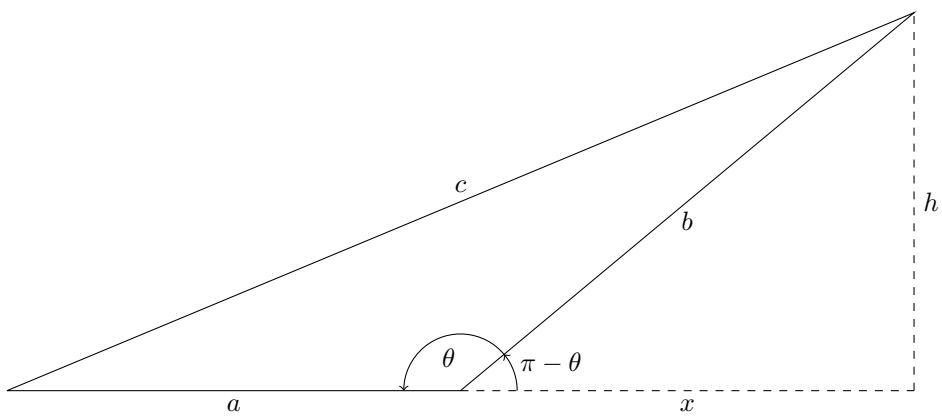

In this case, we know that $x^2 + h^2 = b^2$ and $x = b\cos(\pi - \theta)$. Further, by the pythagorean theorem proved above, we know that

$$\begin{aligned} c^2 &= (a + x)^2 + h^2 \\ &= a^2 + 2ax + x^2 + h^2 \\ &= a^2 + b^2 + 2ax \end{aligned}$$

We can rewrite our equation $x = b\cos(\pi - \theta) = -b\cos(\theta)$ since the function $\cos(x)$ has a period of 2π. Then we conclude

$$\begin{aligned} c^2 &= (a + x)^2 + h^2 \\ &= a^2 + 2ax + x^2 + h^2 \\ &= a^2 + b^2 - 2ab\cos(\theta) \end{aligned}$$

This is exactly what we wanted to prove for Case II. $\square$

3. State and prove the cosine formula for the inner product. Using the cosine formula for the inner product, discuss when two vectors are orthogonal "perpendicular" to each other.

Solution:

Theorem 3: Cosine Formula for Inner Product

Let $n \in \mathbb{N}$ be a positive integer and let $\mathbf{x}, \mathbf{y} \in \mathbb{R}^n$. Then the dot product satisfies

$$\mathbf{x} \cdot \mathbf{y} = \|\mathbf{x}\| \, \|\mathbf{y}\| \cos(\theta)$$

where θ is defined to be the angle between vectors $\mathbf{x}$ and $\mathbf{y}$.

Proof. Case I: Assume $\mathbf{x}$ and $\mathbf{y}$ are not scalar multiples of each other. Suppose we begin with two vectors $\mathbf{x}, \mathbf{y} \in \mathbb{R}^n$. Consider the triangle defined by these vectors. The length of each side of this triangle can be given by the $2-$norm of the vectors:

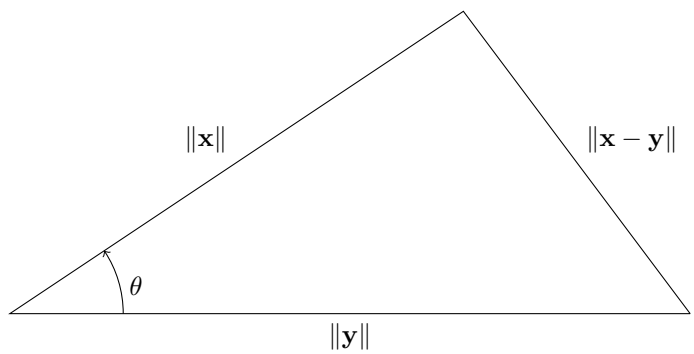

By the Law of Cosines, we know

$$\|\mathbf{x} - \mathbf{y}\|^2 = \|\mathbf{x}\|^2 + \|\mathbf{y}\|^2 - 2 \, \|\mathbf{x}\| \, \|\mathbf{y}\| \, \cos(\theta)$$

Recall, using the algebraic properties of the inner product, we can write

$$\begin{aligned} \|\mathbf{x} - \mathbf{y}\|^2 &= (\mathbf{x} - \mathbf{y}) \cdot (\mathbf{x} - \mathbf{y}) \\ &= \mathbf{x} \cdot (\mathbf{x} - \mathbf{y}) - \mathbf{y} \cdot (\mathbf{x} - \mathbf{y}) \\ &= \mathbf{x} \cdot \mathbf{x} - \mathbf{x} \cdot \mathbf{y} - \mathbf{y} \cdot \mathbf{x} + \mathbf{y} \cdot \mathbf{y} \\ &= \|\mathbf{x}\|^2 - 2 \, \mathbf{x} \cdot \mathbf{y} + \|\mathbf{y}\|^2 \end{aligned}$$

With this we see

$$\|\mathbf{x}\|^2 + \|\mathbf{y}\|^2 - 2 \, \|\mathbf{x}\| \, \|\mathbf{y}\| \, \cos(\theta) = \|\mathbf{x}\|^2 - 2\mathbf{x} \cdot \mathbf{y} + \|\mathbf{y}\|^2$$

By canceling out the appropriate terms using our knowledge of arithmetic, we see

$$\mathbf{x} \cdot \mathbf{y} = \|\mathbf{x}\| \, \|\mathbf{y}\| \, \cos(\theta).$$

□

Solution:

Proof. Case II: Assume $\mathbf{x}$ and $\mathbf{y}$ are scalar multiples of each other (i.e. $\mathbf{y} = a\mathbf{x}$). In this case we know that the angle between our vectors is either $\theta = 0$ or $\theta = \pi$. If $\theta = 0$, then $a > 0$ and $\cos(\theta) = 1$. On the other hand if $\theta = \pi$, then $a < 0$ and $\cos(\theta) = -1$. In either case, we see

$$\begin{aligned}
\mathbf{x} \cdot \mathbf{y} &= \mathbf{x} \cdot (a\,\mathbf{y}) \\
&= a\,\mathbf{x} \cdot \mathbf{x} \\
&= a\|\mathbf{x}\|^2 \\
&= a\|\mathbf{x}\|\,\|\mathbf{x}\|
\end{aligned}$$

Recall that the sign function $f(x) = \operatorname{sgn}(x)$ is a piecewise function defined as follows:

$$\operatorname{sgn}(x) = \begin{cases} 1 & \text{if } x > 0, \\ 0 & \text{if } x = 0, \\ -1 & \text{if } x < 0. \end{cases}$$

Then, for any scalar $a \in \mathbb{R}$, we can write $a = \operatorname{sgn}(a)\,|a|$. Moreover, since $|a| = \sqrt{a^2}$, we see

$$\begin{aligned}
\mathbf{x} \cdot \mathbf{y} = \operatorname{sign}(a)\,\sqrt{a^2}\,\sqrt{\sum_{i=1}^{n} x_i^2}\,\|\mathbf{x}\|_2 &= \operatorname{sign}(a)\,\sqrt{\sum_{i=1}^{n} (ax_i)^2}\,\|\mathbf{x}\|_2 \\
&= \operatorname{sign}(a)\,\|\mathbf{y}\|_2\,\|\mathbf{x}\|_2 \\
&= \cos(\theta)\,\|\mathbf{y}\|_2\,\|\mathbf{x}\|_2
\end{aligned}$$

Thus we see that the cosine formula for the inner product holds $\square$

4. (Optional, Extra Credit, Challenge Problem) Let $\mathbf{x} \in \mathbb{R}^n$ be a column vector. Recall that we defined the 2-norm of $\mathbf{x}$ to be

$$\|\mathbf{x}\|_2 = \left(\sum_{i=1}^{n} x_i^2\right)^{1/2}$$

We can create a different norm, called the $\infty-$norm (read "infinity norm"), using the following definition

$$\|\mathbf{x}\|_\infty = \max_{1 \le i \le n} |x_i|$$

which takes the maximum value of the absolute values of all entries of $\mathbf{x}$. Using these definitions, prove

$$\|\mathbf{x}\|_\infty \le \|\mathbf{x}\|_2 \le \sqrt{n} \cdot \|\mathbf{x}\|_\infty$$

Solution: Let $\mathbf{x} \in \mathbb{R}^n$ We prove this inequality in two parts:

I. Prove $\|\mathbf{x}\|_\infty \le \|\mathbf{x}\|_2$

ii. Prove $\|\mathbf{x}\|_2 \le \sqrt{n} \cdot \|\mathbf{x}\|_\infty$

Part I: Let's begin with our first inequality:

$$\|\mathbf{x}\|_\infty \le \|\mathbf{x}\|_2$$

Let $x_i \in \mathbb{R}$ representing the ith entry of vector $\mathbf{x}$. First, we notice that for any $i = 1, 2, ..., n$ we have

$$|x_i| = \sqrt{x_i^2}$$

$$\implies \qquad |x_i|^2 = x_i^2$$

$$\implies \qquad \|x_i\|_\infty^2 = \left(\max_{1 \le i \le n} |x_i|\right)^2 = \max_{1 \le i \le n} x_i^2$$

However, we notice that

$$\|x_i\|_\infty^2 = \max_{1 \le i \le n} x_i^2 \le x_1^2 + x_2^2 + \cdots + x_n^2 = \|\mathbf{x}\|_2^2$$

We have just established our desired inequality.

Part II: We continue with the second part of this proof. In this case we will show

$$\|\mathbf{x}\|_2 \le \sqrt{n} \cdot \|\mathbf{x}\|_\infty$$

To this end, consider

$$\|\mathbf{x}\|_2^2 = x_1^2 + x_2^2 + \cdots + x_n^2 \le n \cdot \left(\max_{1 \le i \le n} x_i^2\right) = n \cdot \|x_i\|_\infty^2$$

Taking the square root of both sides produces our desired inequality.

5. (Optional, Extra Credit, Challenge Problem)

Let $\mathbf{x} \in \mathbb{R}^n$ be a column vector. Recall that we defined the 2-norm of $\mathbf{x}$ to be

$$\|\mathbf{x}\|_2 = \left(\sum_{i=1}^{n} x_i^2 \right)^{1/2}$$

This is one example of a much larger class of vector norms, known as $p-$norms. To create a $p-$norm, we choose a real number $p \geq 1$ and set

$$\|\mathbf{x}\|_p = \left(\sum_{i=1}^{n} |x_i|^p \right)^{1/p}$$

Using this definition, we can set $p = \infty$ and define the $\infty-$norm (read "infinity norm"), using the following definition

$$\|\mathbf{x}\|_\infty = \max_{1 \leq i \leq n} |x_i|$$

Prove $\lim_{p \to \infty} \|\mathbf{x}\|_p = \|\mathbf{x}\|_\infty$

Solution: Let $n \in \mathbb{N}$ and suppose $p \in \mathbb{R}$ with $p \geq 1$. Let $\mathbf{x} \in \mathbb{R}^n$. We begin our proof by establishing lower and upper bounds on $\|\mathbf{x}\|_p$ in terms of $\|\mathbf{x}\|_\infty$. These inequalities are given as follows:

- Lower bound: $\|\mathbf{x}\|_\infty \leq \|\mathbf{x}\|_p$
- Upper bound: $\|\mathbf{x}\|_p \leq \sqrt[p]{n} \cdot \|\mathbf{x}\|_\infty$

After we establish these inequalities, we will take our limit as $p \to \infty$ and use the sandwich theorem to conclude our desired result.

Lower bound: Let's being by establishing the lower bound. To this end, let

$$j =_{1 \leq i \leq n} \{|x_i|\}$$

Based on the definition of the p-norm, we know

$$\sum_{i=1}^{n} |x_i|^p = |x_j|^p + \sum_{\substack{i=0 \\ i \neq j}}^{n} |x_i|^p = \|\mathbf{x}\|_\infty^p + \sum_{\substack{i=0 \\ i \neq j}}^{n} |x_i|^p$$

Since $|x_i| \geq 0$ for all $i = 1, 2, ..., n$, we know that $+ \sum_{\substack{i=0 \\ i \neq j}}^{n} |x_i|^p \geq 0$. We immediately conclude

$$\|\mathbf{x}\|_\infty^p \leq \|\mathbf{x}\|_p^p$$

Taking the pth root of both sides of this produces the desired lower-bound inequality.

Upper bound: We move onto our desired upper bound. Again, we start with the definition of the $p-$norm

$$\|\mathbf{x}\|_p^p = \sum_{i=0}^{n} |x_i|^p \leq \sum_{i=0}^{n} \left(\max_{1 \leq j \leq n} |x_j| \right)^p = \sum_{i=0}^{n} \|\mathbf{x}\|_\infty^p = n \cdot \|\mathbf{x}\|_\infty^p$$

Taking the pth root of both sides produces the desired upper-bound inequality.

Limiting process: With both of these inequalities in hand, we have the following

$$\|\mathbf{x}\|_\infty \leq \|\mathbf{x}\|_p \leq \sqrt[p]{n} \cdot \|\mathbf{x}\|_\infty$$

Taking the limit as $p \to \infty$ of this chain inequality produces the bound

$$\|\mathbf{x}\|_\infty \leq \lim_{p\to\infty} \|\mathbf{x}\|_p \leq \|\mathbf{x}\|_\infty$$

With this we conclude that $\|\mathbf{x}\|_p = \|\mathbf{x}\|_\infty$

Important lemmas: The above analysis relies on two important lemmas:

A. If $0 \leq a \leq b$, then $0 \leq \sqrt[p]{a} \leq \sqrt[p]{b}$ for any real $p \geq 1$.

Proof. To prove this lemma, we will revert back to calculus. Consider a real number $p \geq 1$. Define the function

$$f(x) = x^{1/p}$$

for $x > 0$. If we can show that $f'(x) > 0$, we conclude that $f(x)$ is increasing on the interval $(0, \infty)$. To this end, recall

$$\frac{1}{p} \cdot x^{(1/p-1)}$$

Since $x > 0$, we know $x^{(1/p-1)} > 0$ and we conclude that $f(x)$ is increasing. □

B. If $n \in \mathbb{N}$, then $\lim_{p\to\infty} \sqrt[p]{n} = 1$

Proof. Suppose $L = \lim_{p\to\infty} \sqrt[p]{n} > 0$. Then, taking the logarithm of each side, we see

$$\log(L) = \log\left(\lim_{p\to\infty} \sqrt[p]{n}\right) = \lim_{p\to\infty} \log\left(\sqrt[p]{n}\right)$$

Since $\sqrt[p]{n} = n^{1/p}$, we can use the power rule of logarithms to conclude

$$\log(L) = \lim_{p\to\infty} \frac{1}{p} \cdot \log(n) = \log(n) \cdot \lim_{p\to\infty} \frac{1}{p} = 0.$$

Hence, we conclude that

$$10^{\log(L)} = 10^0$$

which proves $L = 1$. □